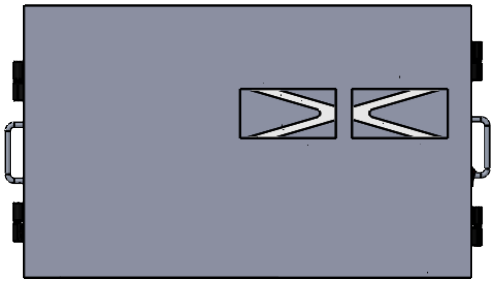

LEFT VIEW

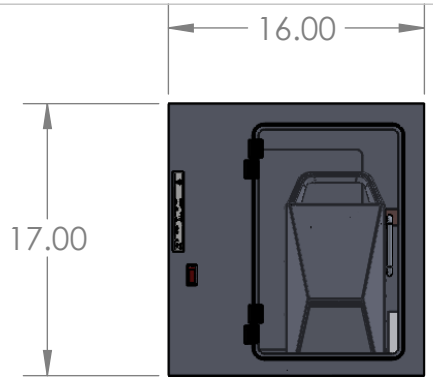

FRONT VIEW

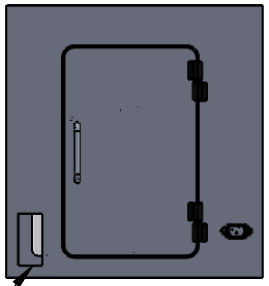

REAR VIEW

REAR CABLE
PORT 1.5"W x 3.25"H

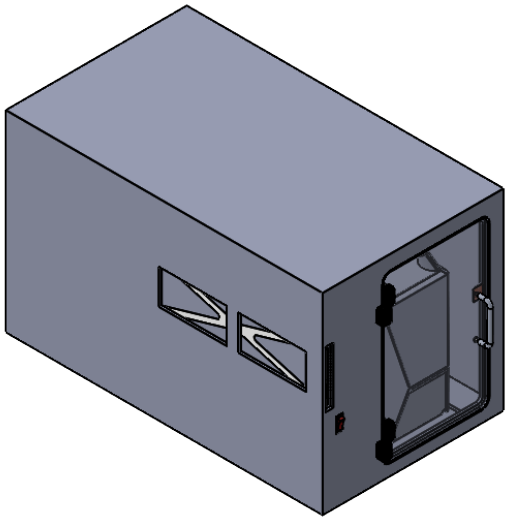

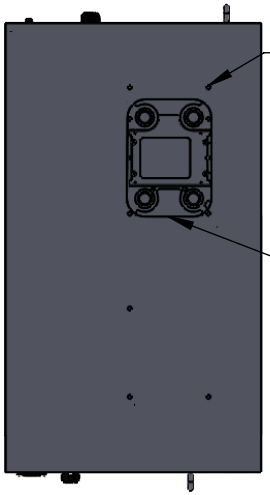

1/4" MOUNTING
HOLES FOR LASER

CUTOUT
FOR LASER EYE
AND LIGHTS

BOTTOM VIEW

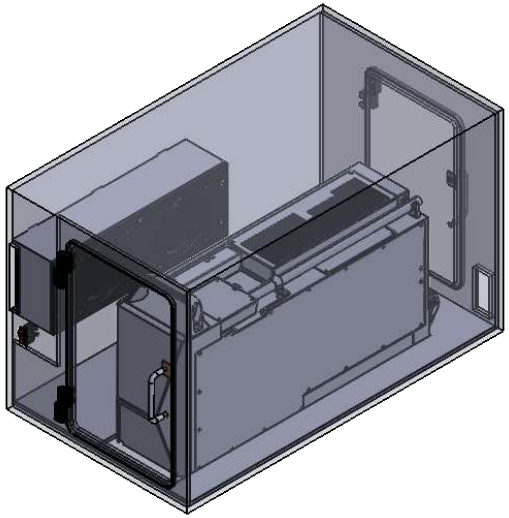

KEYENCE MD-U2000 LASER HEAD

FRONT DOOR OPENING IS 8.75"W x 14"H

REAR DOOR OPENING IS 7.75"W x 12.5"H

DUST FREE PC	
DESCRIPTION DFP201MDU2K-LSR	DRAWING 1843
09/02/2025	SALES@DUSTFREEPC.COM
1-800-775-7611	WWW.DUSTFREEPC.COM

5 4 3 2 1