KEYENCE IM-X1540 STAGE FOR OILY ENVIRONMENTS

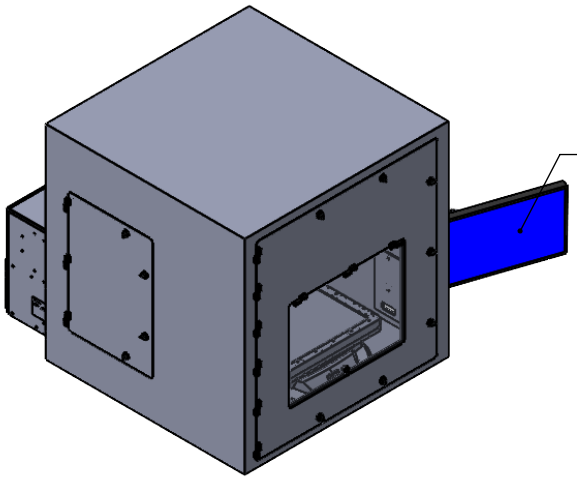

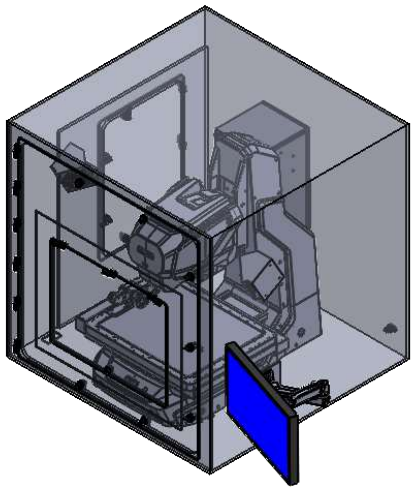

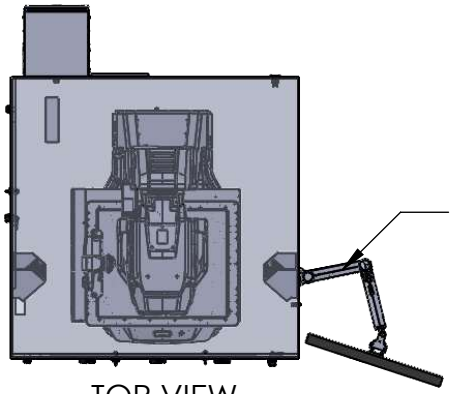

TOP VIEW

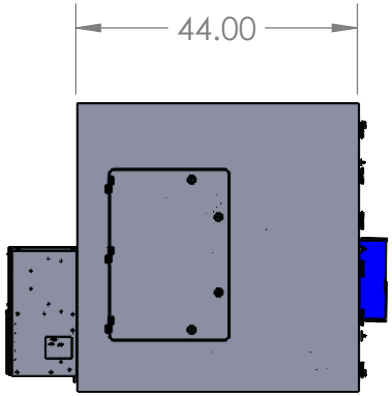

LEFT VIEW

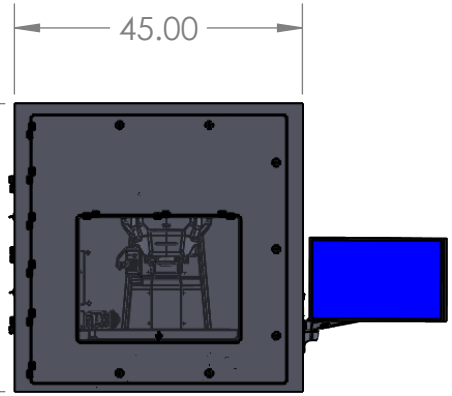

FRONT VIEW

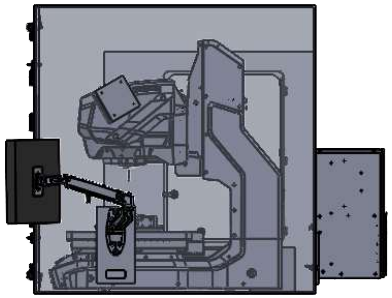

RIGHT VIEW

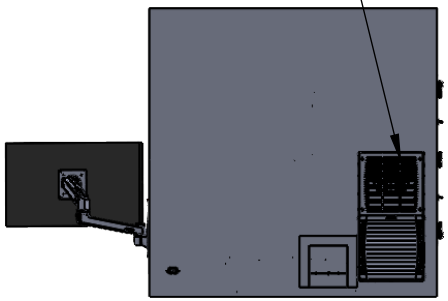

REAR VIEW

FRONT DOOR OPENING IS 38"W x 41"H

STAGE DOOR OPENING IS 26"W x 19.25"H

LEFT SIDE DOOR OPENING IS 17.75"W x 25.75"H

DUST FREE PC	
DESCRIPTION DFP201IM-X1540-3R4-TT	DRAWING 1881
10/27/2025	SALES@DUSTFREEPC.COM
1-800-775-7611	WWW.DUSTFREEPC.COM

5 4 3 2 1