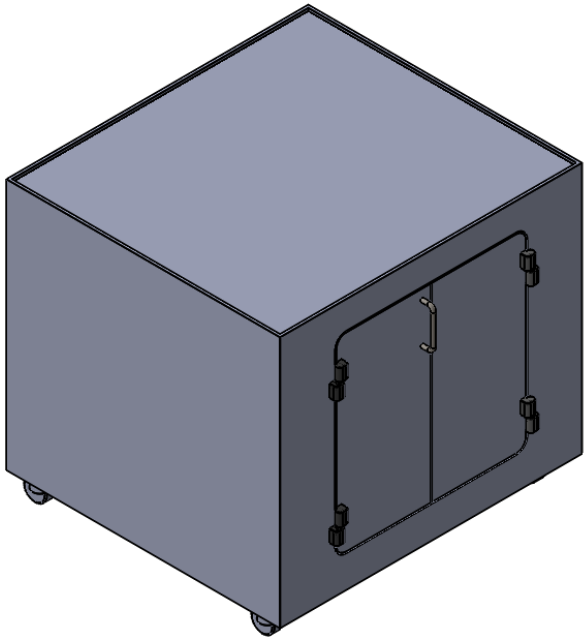

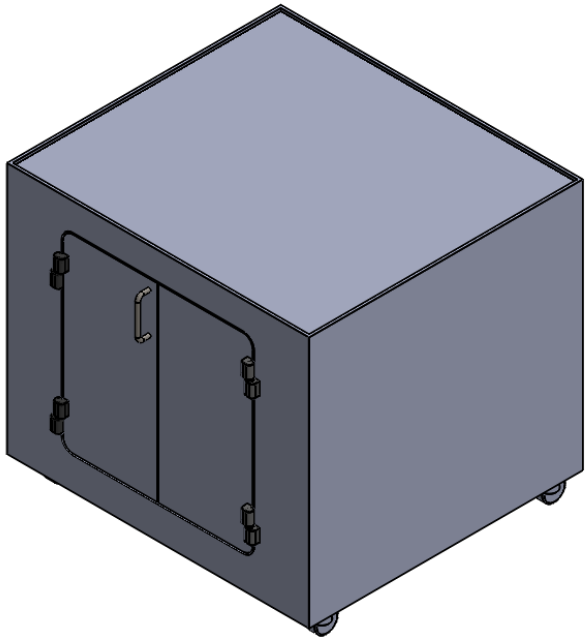

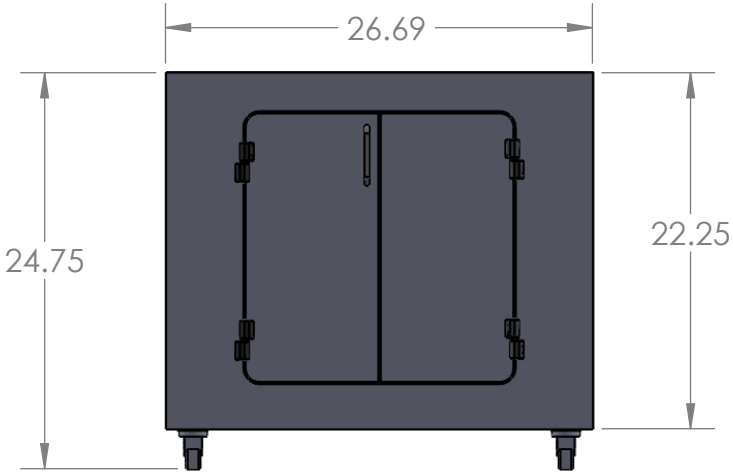

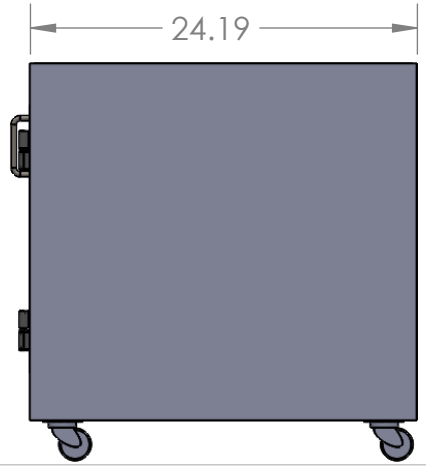

DOOR OPENING IS 16.25"W x 16.25"H

2" CASTERS

DUST FREE PC

DESCRIPTION	DRAWING
DFP200D-STAND	678
02/05/2016	SALES@DUSTFREEPC.COM
1-800-775-7611	WWW.DUSTFREEPC.COM

5 4 3 2 1